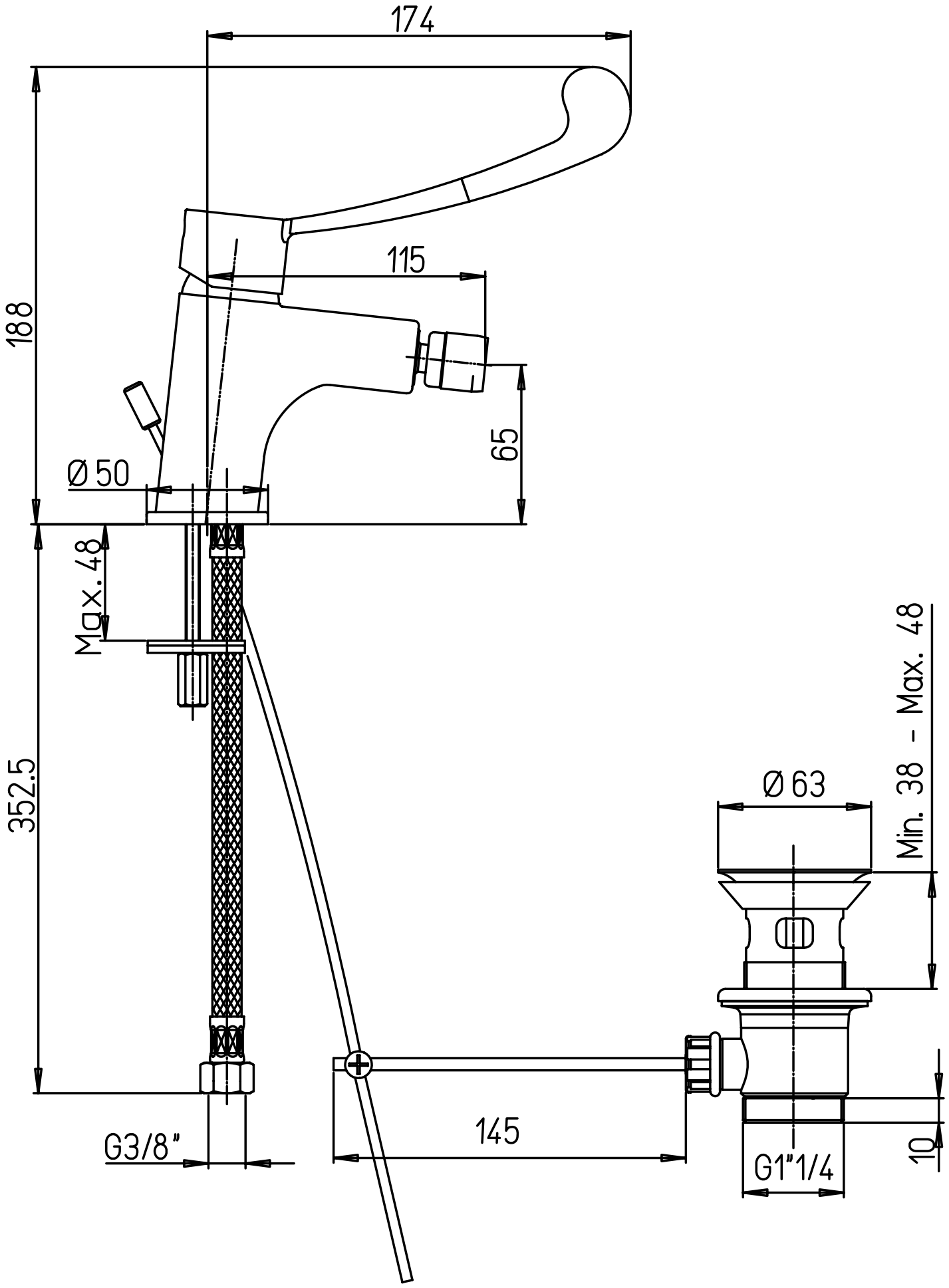
174
188
115
65
Ø 50
Max. 48
352.5
Min. 38 - Max. 48
Ø 63
145
G3/8"
G1"1/4
10